Vectorial Fast Correlation Attacks over Extension Fields

Bin Zhang Ruitao Liu Willi Meier

Chinese Academy of Sciences, Beijing, China,
University of Applied Sciences and Arts Northwestern Switzerland, Windisch, Switzerland

March 20th, 2026

Outline

1. Background
2. Vectorial Approach to Fast Correlation Attacks
3. Vectorial Fast Correlation Attacks over Extension Fields
4. Improved Cryptanalysis of SNOW 2.0
5. Conclusions

Fast Correlation Attacks (1)

- Meier and Staffelbach introduced fast correlation attack (FCA) in 1989 to speed up the search of the initial state by some decoding algorithm, which has been a classical cryptanalytic technique for LFSR-based stream ciphers.

- Correlation properties play a key role in the design and analysis of stream ciphers, especially LFSR-based.

- How to find and exploit the statistical relationships between the keystream and a subset of the underlying LFSR sequences is the central task in cryptanalysis.

- The notion of correlation can be defined either over $\mathrm{GF}(2)$ or over some larger alphabet which is actually an extension field $\mathrm{GF}(2^m)$ with $m = 4, 8, 16, 32$.

Fast Correlation Attacks (2)

- At Asiacrypt 2025, a further generalized notion of vector-wise correlation with arbitrary size is presented together with an efficient decoding algorithm which leverages such vector-wise correlation to recover the (partial) initial state of the target LFSR.

- The new concept of correlation profile is introduced to characterize both the correlation of some linear approximation and the number of approximations sharing that correlation simultaneously with the whole framework of vectorial FCAs established.

- It is shown how to construct the attack vector by carefully selecting the component-wise linear approximations, to transform the secret information in the derived linear subspace by the algorithmic procedure of vectorial code-reduction and how to retrieve the partial secret information contained in the resulting subspace.

Fast Correlation Attacks (3)

- On the other hand, fast correlation attacks over extension fields were proposed at Crypto 2015, aiming to better exploit the inherent algebraic structure of the underlying word-oriented primitives.

- Although there exist many linearly dependent large-unit linear approximations with the same Squared Euclidean Imbalance (SEI) found in SNOW 2.0, the adversary can only utilize one linear approximation by the FCAs over GF(2^8) currently.

- It remains open on how to make a better use of the large number of linearly dependent linear approximations over GF(2^8) derived from SNOW 2.0 to further reduce the time/data complexities and whether there exist other potentially better large-unit linear approximations, at least of the same type, than those already found.

Fast Correlation Attacks (4)

- Given the prominent role of the SNOW family of stream ciphers in ISO/IEC and 3GPP standards and the Wide-Trail strategy behind AES which relies on the optimal linear approximations with a minimum number of active S-boxes, these two problems are of great importance in theory.

- Moreover, an in-depth study and more exhaustive search of the large-unit linear approximations over extension fields will allow us to know more accurately about the correlation profile of large-unit approximations in SNOW 2.0, which would also be valuable for the cryptanalysis of other members in the SNOW family.

- Furthermore, we need to develop new decoding algorithms adapting to the new framework with large-unit linear approximations being component-wise coordinates in a natural and efficient manner. Can we do something different from the work at Asiacrypt 2025?

Our Contributions

Develop a formal framework for vectorial fast correlation attacks over extension fields with a complete theoretical analysis of all the relevant complexities.

- A natural generalization of the vectorial FCAs at Asiacrypt 2025 is presented to work with non-binary linear approximations as component coordinates.
- We introduce a vectorial collision reduction procedure over extension fields to reduce the large-unit information dimension of the whole linear subspace via the extended k-tree algorithm.
- It is shown how to integrate the bitwise vectorial code-reduction procedure into this large-unit component-wise setting, despite the non-existence of appropriate perfect codes over the target non-binary domain.

Our Contributions

- We present a purely algebraic algorithm for decoding random linear codes over extension fields by defining the multi-dimensional Algebraic Fourier Transform (mul-AFT). It is demonstrated how to efficiently compute the full spectrum of mul-AFT by a row-column style algorithm.
- We show how to accelerate the search of large-unit linear approximations in word-oriented LFSR-based primitives by the fast table technique. This enables us to determine, for the first time, the largest SEI attainable for the same class of approximations at Crypto 2015 along with the corresponding correlation profile over GF(2^8).
- We achieve the best state/key recovery and information leakage attacks against SNOW 2.0, the ISO/IEC 18033-4 standard and a benchmark stream cipher in the European eSTREAM project.

Preliminaries

Definition

The relative entropy or Kullback-Leibler distance between two probability distributions D_0 and D_1 is defined as

$$D(\mathsf{D}_0||\mathsf{D}_1) = \sum_{\eta=0}^{|\mathcal{Z}|-1} \mathsf{Pr}_{\mathsf{D}_0}(\eta) \log \frac{\mathrm{Pr}_{\mathsf{D}_0}(\eta)}{\mathrm{Pr}_{\mathsf{D}_1}(\eta)} = \sum_{\eta=0}^{|\mathcal{Z}|-1} p_\eta \log \frac{p_\eta}{q_\eta},$$

where $(p_0, \ldots, p_{|\mathcal{Z}|-1})$ is the probability vector of D_0 and $(q_0, \ldots, q_{|\mathcal{Z}|-1})$ the probability vector that corresponds to D_1 with the convention that $0 \log \frac{0}{p} = 0$ and $p \log \frac{p}{0} = +\infty$ for $p > 0$.

Definition

The capacity between two distributions D_0 and D_1 is defined as

$$C(\mathsf{D}_0, \mathsf{D}_1) = \sum_{\eta=0}^{|\mathcal{Z}|-1} \frac{(p_\eta - q_\eta)^2}{q_\eta}.$$

If D_1 is the uniform distribution, then $C(\mathsf{D}_0, \mathsf{D}_1)$ is reduced to $C(\mathsf{D}_0)$, which is also called the capacity of D_0 or the Squared Euclidean Imbalance (SEI).

Preliminaries

If a random variable X follows some distribution D and takes a value in a set $\mathcal{Z}$, its probability distribution vector is defined as $p_X = (p_0, p_1, \ldots, p_{|\mathcal{Z}|-1})$ with $p_\eta = \mathsf{Pr}_{\mathsf{D}}(X = \eta)$ for $\eta = 0, 1, \ldots, |\mathcal{Z}| - 1$.

Lemma

Let $p = (p_0, p_1, \cdots, p_{2^m-1})$ be the probability vector of the vectorial Boolean function $f = (f_0, f_1, \cdots, f_{m-1})$: GF$(2)^n \to$ GF$(2)^m$, then

$$\begin{aligned} p_\eta &= 2^{-(m+n)} \sum_{a \in GF(2)^m} \sum_{X \in GF(2)^n} (-1)^{\langle a, f(X) \oplus \eta \rangle} \\ &= 2^{-m} \sum_{a \in GF(2)^m} (-1)^{\langle a, \eta \rangle} c(\langle a, f \rangle) \end{aligned}$$

and

$$C(p) = \sum_{a \in GF(2)^m, a \neq 0} c^2(\langle a, f \rangle).$$

One-dimensional Fast Correlation Attacks over Extension Fields

- At Crypto 2015, a new form of FCA was proposed that works with large-unit linear approximations over some intermediate extension field between GF(2) and the field defining the word size of the primitive.
- The essential idea is to better exploit the algebraic structure inherent in the word-oriented LFSR-based primitive.
- This allows us to construct the linear approximations over GF(2^8) and adopt some decoding algorithm over the same field to restore the LFSR initial state.
- The strategy results in significantly improved results, 2^{49} times better in all the time/memory/data complexities aspects than all the previous best results.

One-dimensional Fast Correlation Attacks over Extension Fields

- The notion of Generlaized Pseudo-linear function modulo 2^n (GPLFM) plays a central role in the large-unit linear approximation, which generalizes the definition of PLFM by Johansson and Maximov.

- Given the large-unit size of m-bit, let $\mathcal{X} = \{X_1, X_2, \cdots, X_d\}$ be a set of d uniformly distributed n-bit random variables with $X_i \in \mathsf{GF}(2^n)$ for $1 \leq i \leq d$, $\mathcal{C} = \{C_1, \cdots, C_g\}$ be a set of n-bit constants and $\mathcal{M}$ be a set of $\frac{n}{m}$-dimensional binary masks of $\mathcal{X}$ and $\mathcal{C}$.
- Now each element in $\mathcal{X}$ and $\mathcal{C}$ can be regarded as a $\frac{n}{m}$-dimensional vector over $\mathsf{GF}(2^m)$.

One-dimensional Fast Correlation Attacks over Extension Fields

Denote some symbol or expression on $\mathcal{X}$ and $\mathcal{C}$ by T_i, we have the formal definition of GPLFM as follows.

Definition

Given three sets $\mathcal{X}$, $\mathcal{C}$ and $\mathcal{M}$, we define:

1. $\mathcal{A}$ is an arithmetic term[a], if it has only the operation of arithmetic $\boxplus$, e.g., $\mathcal{A} = T_1 \boxplus T_2 \boxplus \cdots$.
2. $\mathcal{B}$ is a Boolean term, if it only involves Boolean operations such as OR, AND, XOR, and others, e.g., $\mathcal{B} = (T_1 \oplus T_2) \,\&\, T_3$.
3. $\mathcal{S}$ is a simple term, if it is a symbol either from $\mathcal{X}$ or $\mathcal{C}$.
4. $\Omega \cdot X$ for $X \in \{\mathcal{A}, \mathcal{B}, \mathcal{S}\}$ is the inner product result of the term X with the binary mask $\Omega \in \mathcal{M}$.

[a] An arithmetic subtraction $\boxminus$ can be substituted by $\boxplus$ using $X \boxminus Y = X \boxplus (\bar{Y}) \boxplus 1 \bmod 2^n$, where $\bar{\cdot}$ is the complement operation.

One-dimensional Fast Correlation Attacks over Extension Fields

Definition

$F(X_1, X_2, \cdots, X_d)$ is called a generalized pseudo-linear function modulo 2^n (GPLFM) on $\mathcal{X}$, if it can recursively be expressed in $\Omega \cdot X$ for $X \in \{\mathcal{A}, \mathcal{B}, \mathcal{S}\}$ combined by the Boolean operations.

It can be easily observed that the PLFM forms a subset of the GPLFM, which only satisfies the conditions $1 \sim 3$ in the GPLFM Definition.

- This extension-field methodology enables a deeper exploitation of the algebraic structure that cannot be leveraged in bitwise attacks, as evidenced by the significantly reduced complexities compared to the prior work.
- The resulting framework provides the first solution to the well-known open problem of mounting fast correlation attacks over extension fields, and yields new insights on the word-oriented symmetric primitives.

One-dimensional Fast Correlation Attacks over Extension Fields

- There are 255 linearly dependent large-unit linear approximations found, but the current attack can only use one of the approximations over GF(2^8) to mount the attack.
- It remains open whether there are better linear approximations over GF(2^8) for SNOW 2.0, and how to make a better usage of all the linearly dependent large-unit linear approximations in a natural and efficient way.
- In traditional multidimensional linear cryptanalysis, the adversary typically *first* identifies bitwise linear approximations, and subsequently combines many different bitwise linear approximations to form a vector. Thus the method remains essentially grounded in bitwise approximations. The two frameworks start from fundamentally different premises and follow distinct paths.

Correlation Profile over Extension Fields

- The definition of correlation profile at Asiacrypt 2025 can be revised as follows.

Definition

For a given cipher, let Δ_i $(i \geq 1)$ be a specified SEI value and L_i the number of identified linear approximations over $GF(2^m)$ $(m \geq 1)$ that attain this SEI, if there are w distinct orbits in such a regrouping, we call $\{L_1(\Delta_1), L_2(\Delta_2), \cdots, L_w(\Delta_w)\}$ the correlation profile of the cipher over $GF(2^m)$.

This Definition actually subsumes the earlier Definition at Asiacrypt 2025 as a special case, based on which we can build the new framework over extension fields.

The New Framework of FCAs over Extension Fields

Algorithm 1 The new framework for vectorial FCAs over GF(2^m)

Input: The captured keystream $\mathbf{z} = (z_0, z_1, \ldots, z_{N-1})$

Parameters: $\{L_1(\Delta_1), \cdots, L_w(\Delta_w)\}$

Online: Recover $s^{(0)}$ that is consistent with $\mathbf{z}$

1: Select $\mathcal{L}$ and ϵ following the found correlation profile

2: Partition $\mathcal{L}$ into $\mathcal{L}_1 \cup \mathcal{L}_2$ to construct the vector $\mathcal{V}_1$

3: `for` each coordinate of $\mathcal{V}_1$ `do`

    apply collision reduction to each coordinate of $\mathcal{V}_1$

4: `for` each coordinate of $\mathcal{V}_1$ `do`

    apply code-reduction to each coordinate of $\mathcal{V}_1$

5: Decode to restore the partial information of $s^{(0)}$

6: Retrieve the full $s^{(0)}$ from the recovered partial information

Output: some candidates of $s^{(0)}$

Vectorial Collision Reduction over Extension Fields

- We can construct a v-dimensional vector as

$$\mathcal{V}_1 = (\langle \gamma_{i_0}, s^{(t)} \rangle \oplus \langle \lambda_{i_0}, z^{(t)} \rangle, \cdots, \langle \gamma_{i_{v-1}}, s^{(t)} \rangle \oplus \langle \lambda_{i_{v-1}}, z^{(t)} \rangle). \quad \text{(1a)}$$

- We first assume that v in Eq.(1a) is a small integer in our analysis. Due to the inherent difference between GF(2^m) and GF(2) and the fact that each large-unit data over GF(2^m) actually bundles m bitwise relations together, this is a reasonable assumption.
- We only make the collision reduction at each coordinate position of the vector $\mathcal{V}_1$ along the timeline and the linear combination of the coordinates are temporarily ignored based on the same reason as that mentioned above.
- Instead of Wagner's k-tree algorithm, we adopt the extended k-tree algorithm to construct the parity-checks over the specified large alphabet in the new attack.

The Extended k-tree Algorithm

Problem

Given $k = 2^c$ lists $L_1, \cdots, L_k$, each of length α_e and containing $(l - l')$-dimensional random vectors over GF(2^m). We wish to find $x_1 \in L_1, \cdots, x_k \in L_k$ and $a_1, \cdots, a_k \in$ GF$(2^m)/\{0\}$ such that $a_1 x_1 \oplus \cdots \oplus a_k x_k = 0$.

- The list length α_e is a very important parameter here, determining the final time/memory complexities. If there are l' symbols after collision reduction and we want to find $m_k = (2^m)^b$ solutions to this problem, then α_e should satisfy

$$\frac{(2^m)^{(l-l'+b)/k}}{(2^m-1)^{1-1/k}} \leq \alpha_e \leq \frac{(2^m)^{(l-l'+b)/(1+\log k)}}{(2^m-1)^{1-1/(1+\log k)}} \,. \tag{1}$$

  The lower bound of α_e corresponds to the case that a solution exists followed from the famous Markov inequality, while the upper bound corresponds to the very case of the extended k-tree algorithm over extension fields.

Pre-computing the Parity-checks over Extension fields

- From Eq.$(1a)$, we rewrite the probabilistic linear system over GF(2^m) as

$$(\langle G_{i_0}, s^{(0)}\rangle, \cdots, \langle G_{i_{v-1}}, s^{(0)}\rangle) = (\langle \lambda_{i_0}, z^{(t)}\rangle, \cdots, \langle \lambda_{i_{v-1}}, z^{(t)}\rangle) \oplus \mathbb{E}, \tag{2}$$

  where $G_{i_j} = \gamma_{i_j} A^t$ for $0 \leq j \leq v-1$ is the generator matrix at each coordinate position and $\mathbb{E} = (e_{i_0}, e_{i_1}, \cdots, e_{i_{v-1}})$ is the joint noise vector.
- We can disjoin the truncated columns of G_{i_j} into k lists $L_1, L_2, \cdots, L_k$, each of length $\alpha_e = N/k$, to find the desirable parity-checks via the extended k-tree algorithm.
- To facilitate the analysis, we set the list length α_e equal to the upper bound from Eq.(1), i.e.,

$$\alpha_e = \frac{(2^m)^{(l-l'+b)/(1+\log k)}}{(2^m-1)^{1-1/(1+\log k)}}, \tag{3}$$

  which means that each list is equal to each other over the rounds except the last round, i.e., $w_{max} = \alpha_e$.

Pre-computing the Parity-checks over Extension fields

- If the number of parity checks pre-computed is $m_k = (2^m)^b$, then the time and memory complexities of the preprocessing phase are $\sqrt{2^m} \cdot k \cdot \alpha_e$ and $4 \cdot k \cdot \alpha_e$, respectively.
- After the vectorial collision reduction at each coordinate via the extended k-tree algorithm, we have the following probabilistic linear system to solve

$$(\langle G'_{i_0}, s_{tr}^{(0)} \rangle, \cdots, \langle G'_{i_{v-1}}, s_{tr}^{(0)} \rangle) = (\langle \lambda'_{i_0}, z_{tr}^{(t)} \rangle, \cdots, \langle \lambda'_{i_{v-1}}, z_{tr}^{(t)} \rangle) \oplus \mathbb{E}_{tr}, \tag{4}$$

where G'_{i_j} is the matrix after the k-tuple linear combination of G_{i_j} via the extended k-tree algorithm, $s_{tr}^{(0)}$ is the remaining information vector after truncating the $m(l - l')$ bits in the end of $s^{(0)}$ and λ'_{i_j} is the resultant linear mask from the linear combination of the corresponding λ_{i_j}s with the resultant keystream vector $z_{tr}^{(t)}$ for $0 \leq j \leq v - 1$ derived accordingly.

Vectorial Code-reduction over Extension Fields

- The vectorial code-reduction technique plays a central role in reducing the information dimension of the involved secret information in the spanned linear subspace, while keeping the linear combination relations among the component-wise linear approximations.
- However, there are some fundamental difficulties when adopting the vectorial code-reduction in a straight forward way over some extension fields. Precisely, the dimension of the involved secret information measured in large data unit does not always match the corresponding length of the codeword in the specified perfect codes over extension fields.
- For example, the classical generalized Hamming code over $\mathrm{GF}(2^8)$ is a $[n, k, d] = [257, 255, 3]$ linear code, which is a perfect code over $\mathrm{GF}(2^8)$, but its information dimension $255 \gg 64$ is too large to be used in the vectorial code-reduction over $\mathrm{GF}(2^8)$ directly.
- This motivates us to study some other method to fulfill the same information dimension reduction task over extension fields.

Vectorial Code-Reduction over Extension Fields

If we construct a v-dimensional vector $\mathcal{V}_1$ as $\mathcal{V}_1 = (AP_0, AP_1, \cdots, AP_{v-1})$ with $AP_j = \langle \gamma_{i_j}, s^{(t)} \rangle \oplus \langle \lambda_{i_j}, z^{(t)} \rangle$ $(0 \leq j \leq v-1) \in \mathrm{GF}(2^m)$ being the representative component-wise large-unit linear approximation in Eq.(1a) chosen from the L_i approximations following some correlation profile over $\mathrm{GF}(2^m)$

Theorem

Let $p = (p_0, p_1, \cdots, p_{2^{vm}-1})$ be the probability vector of $\mathcal{V}_1 = (AP_0, AP_1, \cdots, AP_{v-1})$ constructed according to the correlation profile $\{L_1(\Delta_1), L_2(\Delta_2), \cdots, L_w(\Delta_w)\}$ with each chosen $AP_i \in GF(2^m)$ $(m > 1)$ being the basis linear approximation, given the linear combination coefficient vector $\alpha_l = (\alpha_0^l, \alpha_1^l, \cdots, \alpha_{v-1}^l) \in (GF(2^m))^v$ $(\alpha_l \neq 0)$, we have

$$C(p) = \sum_{\substack{\alpha_l \in (GF(2^m))^v \\ \alpha_l \neq 0}} C\langle \alpha_l, \mathcal{V}_1 \rangle \geq \sum_{i=1}^{w} L_i \Delta_i \tag{6}$$

Vectorial Code-Reduction over Extension Fields

- Let us start from the following vectorial linear noisy system, either after the vectorial collision reduction or without it, over GF(2^m):

$$(\langle \Gamma_{i_0} A_t, s^{(0)} \rangle, \cdots, \langle \Gamma_{i_{v-1}} A_t, s^{(0)} \rangle) = (\langle \lambda_{i_0}, z^{(t)} \rangle, \cdots, \langle \lambda_{i_{v-1}}, z^{(t)} \rangle) \oplus \bar{\mathbb{E}},$$

  where $\bar{\mathbb{E}} = (\bar{e}_{i_0}, \bar{e}_{i_1}, \cdots, \bar{e}_{i_{v-1}})$ is the joint noise vector and $(\Gamma_{i_0}, \Gamma_{i_1}, \cdots, \Gamma_{i_{v-1}})$ is the v-dimensional linear mask vector with independent coordinate masks over GF(2^m).

- Our strategy is to keep the large-unit boundaries and at the same time dissect each coordinate position and make the bitwise vectorial code-reduction at each of the m sub-dimensional.

- The observation is that the v-dimensional linear system over GF(2^m) in Eq.(5) can be regarded as a mv-dimensional vectorial system over GF(2).

Vectorial Code-Reduction over Extension Fields

The vectorial code-reduction over extension fields can be fulfilled by utilizing some small table look-ups for syndrome decoding of the employed perfect codes. Further, to convert the m bitwise relations back into a data unit over GF(2^m), we have the following Theorem, which characterizes the theoretical relations between the m bitwise marginal distributions and the joint distribution of $\widetilde{\mathbb{E}}_{i_j}$ after the transform.

Theorem

Let p^{i_j} be the probability vector of the joint noise vector $\widetilde{\mathbb{E}}_{i_j}$ in the new system and $p_{i_j}^{(t,k)}$ be the marginal probability distribution of each $f_{i_j}^{(t,k)} = \langle \bar{e}_{i_j}^{(t,k)}, s^{(0)} \rangle \oplus e_{i_j}^{(t,k)}$ for $0 \leq k \leq m-1$, then $p_\eta^{i_j} = 2^{-m} \sum_{a \in GF(2)^m} (-1)^{\langle a, \eta \rangle}\ c(\langle a, f_{i_j}^{(t,k)} \rangle)$, i.e., we can utilize the Walsh-Hadamard Transform to compute the joint distribution p^{i_j} over GF(2^m) from the m bitwise marginal probability distributions for $0 \leq j \leq v-1$ and $0 \leq \eta \leq 2^m - 1$.

Vectorial Code-Reduction over Extension Fields

- The above Theorem is the key switching procedure in the developed vectorial FCAs over extension fields, which also indicates the actual time complexity of such a transformation by adopting the FWHT accordingly.
- After this switching back procedure, the new system over GF(2^m) to solve is

$$(\langle \Gamma'_{i_{t,0}}, s'^{(0)} \rangle, \cdots, \langle \Gamma'_{i_{t,v-1}}, s'^{(0)} \rangle) = (\langle \lambda'_{i_{t,0}}, z^{(t)} \rangle, \cdots, \langle \lambda'_{i_{t,v-1}}, z^{(t)} \rangle) \oplus \bar{\mathbb{E}},$$

where $\bar{\mathbb{E}} = (\bar{e}_{i_0}, \bar{e}_{i_1}, \cdots, \bar{e}_{i_{v-1}})$ is the same joint noise vector as before, $\Gamma'_{i_{t,k}}$ is the new linear mask for each time instance t of the remaining secret information vector $s'^{(0)}$ with $\lambda'_{i_{t,0}}$ being the corresponding linear mask of the keystream.

The New Method for Decoding the Vectorial System

- First regard the element of GF(q) as a m-dimensional vector over GF(2), then further treat it as a binary representation of an integer using the usual little-endian order. Thus, we have GF$(q) = \{0, 1, \cdots, q-1\}$.
- Let $\varphi : G_1 \to G_2$ be a group isomorphism from group $< G_1, + >$ to another group $< G_2, \cdot >$, i.e., $\forall a, b \in G_1$, $\varphi(a+b) = \varphi(a) \cdot \varphi(b)$.
- Let $\mathcal{C}$ be a $[n, l']$ linear code of dimension l' and length n over GF(q), which is a subspace of GF$(q)^n$ with q^l codewords.
- We consider the usual decoding problem as defined at Asiacrypt 2025, i.e., find the closest codeword $\mathcal{U} = (\mathcal{U}_0, \mathcal{U}_1, \cdots, \mathcal{U}_{n-1}) \in \mathcal{C}$ which has the least Hamming distance $w_H(\mathcal{U}, \mathcal{Z})$ to a received vector $\mathcal{Z} = (\mathcal{Z}_0, \mathcal{Z}_1, \cdots, \mathcal{Z}_{n-1}) \in$ GF$(q)^n$ and decode the information vector $\widehat{\mathbf{u}} = (u_0, u_1, \cdots, u_{l'-1})$ such that $U_t = \langle \widehat{\mathbf{u}}, \mathbf{c}_t \rangle$, where $\mathbf{c}_t$ is the t-th column vector of the generator matrix M of $\mathcal{C}$.

Multi-dimensional Algebraic Fourier Transform–Mul-AFT

- Define the group isomorphism $\varphi : \varphi(a) = y^a$ from $< \mathsf{GF}(q), \oplus >$ to a group $G =< \{y^0, y^1, \cdots, y^{q-1}\}, \diamond >$, where y is an indeterminate variable and $\diamond$ is the binary operation in G defined by $y^a \diamond y^b \triangleq y^{a \oplus b}$.
- It is easy to see that each element of G is its inverse by itself, thus G is indeed a group under the $\diamond$ operation.

Definition

Given a function $f : \mathsf{GF}(q)^{l'} \to \mathbb{Z}[G]$ with $\mathbb{Z}[G]$ being the set of finite formal series with integer coefficients from $\mathbb{Z}$, for $\mathbf{w} = (w_0, w_1, \cdots, w_{l'-1}) \in \mathsf{GF}(q)^{l'}$ and $\mathbf{x} = (x_0, x_1, \cdots, x_{l'-1}) \in \mathsf{GF}(q)^{l'}$, we define the l'-dimensional AFT of f as

$$\widehat{f}(w_0, w_1, \cdots, w_{l'-1}) = \sum_{(x_{l'-1}, \cdots, x_0) \in GF(q)^{l'}} f(x_0, x_1, \cdots, x_{l'-1}) \diamond \varphi(\langle \mathbf{w}, \mathbf{x} \rangle)$$

$$= \sum_{x_{l'-1} \in GF(q)} (\varphi(w_{l'-1} x_{l'-1}) \diamond \sum_{x_{l'-2} \in GF(q)} (\varphi(w_{l'-2} x_{l'-2}) \diamond \cdots$$

$$\cdots \diamond \sum_{x_0 \in GF(q)} \varphi(w_0 x_0) \diamond f(x_0, \cdots, x_{l'-1}))),$$

Decoding Analysis

Theorem

$\rho(\mathbf{w}) = Re(\widehat{F}(\mathbf{w}))$, where $Re(\cdot)$ is the coefficient of y^0 in the result of $\widehat{F}(\mathbf{w})$, for all $\mathbf{w} \in GF(q)^{l'}$.

Let the indicator function $\delta(x), x \in \mathrm{GF}(q)$ is defined as $\delta(x) = 1$, if $x = 0$; otherwise $\delta(x) = 0$. We first introduce a function $F(\mathbf{x}) = \sum_{j=0}^{n-1} \mathbf{1}_{\mathbf{x}=\mathbf{c}_j} \varphi(Z_j)$, for all $\mathbf{x} \in \mathrm{GF}(q)^{l'}$. The mul-AFT $\widehat{F}$ of $F(\mathbf{x})$ is derived as

$$\widehat{F}(\mathbf{w}) = \sum_{\mathbf{x} \in GF(q)^{l'}} F(\mathbf{x}) \diamond \varphi(\langle \mathbf{w}, \mathbf{x} \rangle) = \sum_{\mathbf{x} \in GF(q)^{l'}} (\sum_{j=0}^{n-1} \mathbf{1}_{\mathbf{x}=\mathbf{c}_j} \varphi(Z_j)) \diamond \varphi(\langle \mathbf{w}, \mathbf{x} \rangle)$$

$$= \sum_{j=0}^{n-1} \varphi(\langle \mathbf{w}, \mathbf{c}_j \rangle \oplus Z_j) = \sum_{j=0}^{n-1} y^{\langle \mathbf{w}, \mathbf{c}_j \rangle \oplus Z_j},$$

where $\mathbf{w} \in \mathrm{GF}(q)^{l'}$ and $\sum$ is the integer sum. From the above analysis, we have the above theoretical result.

Decoding Example

Example

Let $\mathsf{GF}(2^2) = \mathsf{GF}(2)[x]/(x^2+x+1)$ and a $[3,2]$ linear code over this field is given below. Denote the generator matrix G by

$$G = \begin{pmatrix} 1 & 2 & 1 \\ 2 & 3 & 3 \end{pmatrix} = (\mathbf{c}_0, \mathbf{c}_1, \mathbf{c}_2).$$

Then $(1,1)$ is encoded as $(3,1,2)$. Now we want to decode this codeword by the above mul-AFT method. The truth table of function $F(x_0, x_1)$ is

$$\begin{pmatrix} F(0,0) & F(1,0) & F(2,0) & F(3,0) \\ F(0,1) & F(1,1) & F(2,1) & F(3,1) \\ F(0,2) & F(1,2) & F(2,2) & F(3,2) \\ F(0,3) & F(1,3) & F(2,3) & F(3,3) \end{pmatrix} = \begin{pmatrix} 0 & 0 & 0 & 0 \\ 0 & 0 & 0 & 0 \\ 0 & y^3 & 0 & 0 \\ 0 & y^2 & y & 0 \end{pmatrix}$$

Decoding Example

Example

We first perform the AFT on each row and then on each column, the matrix is transformed as follows.

$$\begin{pmatrix} 0 & 0 & 0 & 0 \\ 0 & 0 & 0 & 0 \\ y^3 & y^2 & y & y^0 \\ y^2+y & 2y^3 & y^2+y^0 & y+y^0 \end{pmatrix} \rightarrow \begin{pmatrix} y^3+y^2+y & 2y^3+y^2 & y^2+y+y^0 & y+2y^0 \\ y^2+2y & 3y^0 & 2y^3+y^1 & y^3+2y^2 \\ y^3+2y^0 & 2y^2+y & y^3+y^2+y & y^3+y+y^0 \\ y^3+y^2+y^0 & y^3+2y^1 & y^2+2y^0 & y^3+y^2+y \end{pmatrix}$$

Thus the maximal coefficient of y^0 is 3, from which we know that the information symbol is $(1,1)$. The concrete computation process of mul-AFT is clearly illustrated by this example. □

The time complexity of mul-AFTs is

$$\frac{q^{l'}}{q} q \log q + \cdots + \frac{q^{l'}}{q} q \log q = l' \frac{q^{l'}}{q} q \log q = l' q^{l'} \log q.$$

The Complexity Analysis

Theorem

Given the derived system and α_e the split list size in the extended k-tree algorithm, let $p_\eta^{i_j}$ be the joint probability distribution computed from Theorem 9 and $d_1 = \mathtt{dim}(s'^{(0)})$ the information dimension over $GF(2^m)$ of $s'^{(0)}$, then Algorithm 1 has the following complexities

1. *The data complexity is* $N = k(2d_1 m \ln 2)^{\frac{1}{1+\log k}}(2^m - 1)^{\frac{1}{\theta}-1}(2^m)^{\frac{l-d_1}{\theta}}(\Delta(\widetilde{\mathbb{E}}))^{-\frac{1}{\theta}}$, *where* $\Delta(\widetilde{\mathbb{E}})$ *is the capacity of* $\widetilde{\mathbb{E}}$ *computed from* $p_\eta^{i_j}$ *and* $\theta = 1 + \log k$.
2. *The memory complexity is* $\max\{4v \cdot k \cdot \alpha_e, N\}$.
3. *The dominating time complexity for restoring the remaining secret information after vectorial code-reduction is* $v \cdot (\sqrt{2^m} \cdot k \cdot \alpha_e) + d_1 \cdot 2^{d_1}$ *basic field operations over* $GF(2^m)$.

The Specification of SNOW 2.0

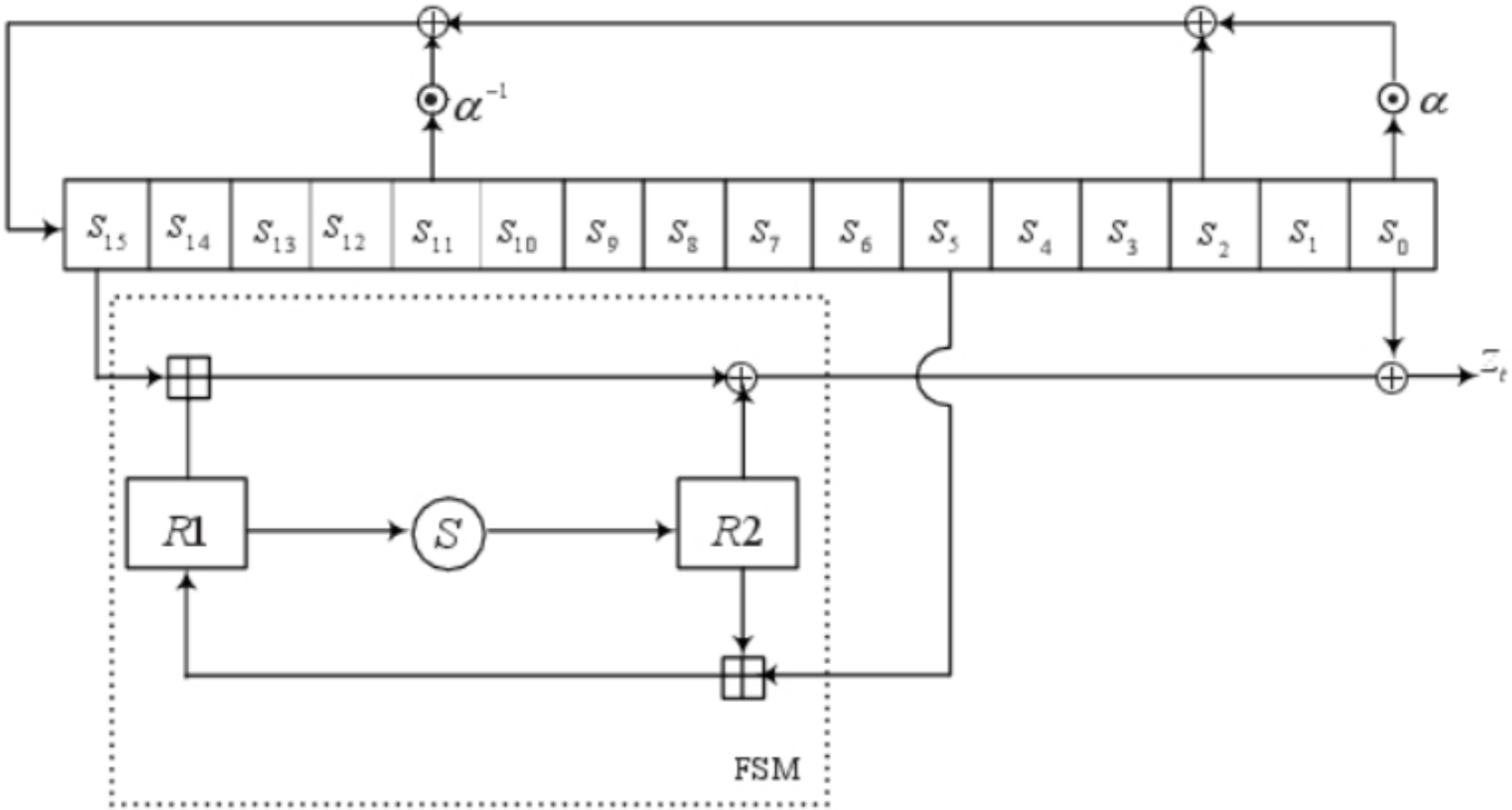

Figure: The keystream generation of SNOW 2.0

The Byte-wise Representation of the LFSR over GF(2^8)

The 32-bit LFSR sequence $\{s_i\}_{i=0}^{\infty}$ generated can be dissected into an equivalent representation over GF(2^8) with the 64 byte-wise LFSR initial state variables $s^{(0)} = \{s_i^j\}$ for $0 \le i \le 15$ and $0 \le j \le 3$.

$$
\begin{aligned}
s_{t+16} &= (\beta^{16}\alpha^3 + \beta^{39}\alpha^2 + \beta^6\alpha + \beta^{64})(s_{t+11}^3\alpha^3 + s_{t+11}^2\alpha^2 + s_{t+11}^1\alpha + s_{t+11}^0) \\
&\quad + s_{t+2}^3\alpha^3 + s_{t+2}^2\alpha^2 + s_{t+2}^1\alpha + s_{t+2}^0 + \alpha(s_t^3\alpha^3 + s_t^2\alpha^2 + s_t^1\alpha + s_t^0), \\
&= (\beta^{16}s_{t+11}^3\alpha^6 + \beta^{39}s_{t+11}^3\alpha^5 + \beta^6 s_{t+11}^3\alpha^4 + \beta^{64}s_{t+11}^3\alpha^3) \\
&\quad + (\beta^{16}s_{t+11}^2\alpha^5 + \beta^{39}s_{t+11}^2\alpha^4 + \beta^6 s_{t+11}^2\alpha^3 + \beta^{64}s_{t+11}^2\alpha^2) \\
&\quad + (\beta^{16}s_{t+11}^1\alpha^4 + \beta^{39}s_{t+11}^1\alpha^3 + \beta^6 s_{t+11}^1\alpha^2 + \beta^{64}s_{t+11}^1\alpha) \\
&\quad + (\beta^{16}s_{t+11}^0\alpha^3 + \beta^{39}s_{t+11}^0\alpha^2 + \beta^6 s_{t+11}^0\alpha + \beta^{64}s_{t+11}^0) \\
&\quad + s_{t+2}^3\alpha^3 + s_{t+2}^2\alpha^2 + s_{t+2}^1\alpha + s_{t+2}^0 + \alpha(s_t^3\alpha^3 + s_t^2\alpha^2 + s_t^1\alpha + s_t^0) \\
&= (s_{t+2}^3 + \beta^{23}s_t^3 + s_t^2 + \beta^{16}s_{t+11}^0)\alpha^3 + (s_{t+2}^2 + \beta^{245}s_t^3 + \beta^{39}s_{t+11}^0 + s_{t+11}^3)\alpha^2 \\
&\quad + (s_{t+2}^1 + \beta^{48}s_t^3 + s_t^0 + \beta^6 s_{t+11}^0 + s_{t+11}^2)\alpha + (s_{t+2}^0 + \beta^{239}s_t^3 + \beta^{64}s_{t+11}^0 + s_{t+11}^1).
\end{aligned}
$$

The Fast Table Technique

We can rewrite the linear approximation process as

$$\langle \Gamma, z_t \rangle = \langle \Gamma, s_t \rangle \oplus \langle \Gamma, \mathsf{Sbox}^{-1}(y_t) \boxplus s_{t+15} \rangle \oplus \langle \Gamma, R2_t \rangle,$$
$$\langle \Lambda, z_{t+1} \rangle = \langle \Lambda, s_{t+1} \rangle \oplus \langle \Lambda, s_{t+16} \boxplus R2_t \boxplus s_{t+5} \rangle \oplus \langle \Lambda', y_t \rangle.$$

Here there are two linear approximations involved, i.e.,

$$\langle \Gamma, \mathsf{Sbox}^{-1}(y_t) \boxplus s_{t+15} \rangle = \langle \Gamma, s_{t+15} \rangle \oplus \langle \Lambda', y_t \rangle \oplus N_1(t),$$
$$\langle \Lambda, s_{t+16} \boxplus s_{t+5} \boxplus R2_t \rangle = \langle \Lambda, s_{t+16} \rangle \oplus \langle \Lambda, s_{t+5} \rangle \oplus \langle \Lambda, R2_t \rangle \oplus N_2(t),$$

where $\Lambda' = (\mathtt{Mix})^T \Lambda$ and $\mathtt{Mix}$ being the Mixcolumn matrix over $\mathsf{GF}(2^8)$.

The Fast Table Technique

Problem

Whether there exist other better large-unit linear approximations having some even stronger SEI in the framework of Crypto 2015 and whether it is possible to fully exploit all the large-unit linear masks with a large SEI in one integrated framework ?

- It is desirable to make an exhaustive search of all the possible linear masks Γ in the linear approximation to see what is the answer to this *Problem*.
- However, there are 2^{32} possible values for Γ in the outer loop and for each candidate mask Γ, we have to compute the noise distributions of $N_2(t)$ and $N_1(t)$ in the linear approximation Eqs. with the Algorithm 1 from Crypto 2015 and Algorithm 1a in Appendix respectively, after which a convolution of them has to be made. This complexity, though not very high is around 2^{56}.

The Fast Table Technique

Algorithm 2 Pre-compute $M[2][3][3]$

Processing:

1: Initialize $M[2][3][3]$ with zeros.
2: **for** $\texttt{carry} = 0$ to 2 **do**
3: **for** $(x_0, x_1, x_2) = (0, 0, 0)$ to $(1, 1, 1)$ **do**
4: $u = (\texttt{carry} \boxplus x_0 \boxplus x_1 \boxplus x_2)$ & `0xff`;
5: $f = (u \oplus x[0] \oplus x[1] \oplus x[2])$ & `0x1`;
6: $M[f][u \gg 1][\texttt{carry}] + +$;

Algorithm 3 Compute `FT`[256][3][3]

Input: $M[2][3][3]$

Processing:

1: Initialize $M_1[3][3]$ with zeros.
2: **for** $\theta = 0$ to 256 **do**
3: $M_1 = \prod_{i=0}^{7} M[\theta \gg i][\cdot][\cdot]$;
4: $\texttt{FT}[\theta][\cdot][\cdot] = M_1$

The Fast Table Technique

Algorithm 4 Compute the distribution of $N_2(t)$

Input: $M_1[3][256], M_2[3][256]$, $w = (w_3, w_2, w_1, w_0)$

Processing:

Initialize M_1 and M_2 with zeros.
for $\texttt{carry} = 0$ to 2 **do**
  for $\theta = 0$ to 256 **do**
    $M_1[\texttt{carry}][w_0 \cdot \theta] += \frac{\texttt{FT}[\theta][\texttt{carry}][0]}{2^{24}}$
for $i = 1$ to 3 **do**
  Initialize M_2 with zeros
  for $\texttt{carry} = 0, 1, 2$ and $\theta = 0, 1, \cdots, 255$ **do**
    for $\texttt{carry}_1 = 0, 1, 2$ and $\theta_1 = 0, 1, \cdots, 255$ **do**
      $M_2[\texttt{carry}_1][w_i \cdot \theta_1 \oplus \theta] += \frac{\texttt{FT}[\theta_1][\texttt{carry}_1][\texttt{carry}] \cdot M_1[\texttt{carry}][\theta]}{2^{24}}$
  $M_1 \leftarrow M_2$
Output: The distribution $p_i = \sum_{j=0}^{255} M_2[i][j]$ for $0 \leq i \leq 255$.

The Fast Table Technique

Algorithm 5 Pre-compute $\texttt{FT2}[256][2][2][256]$

Processing:

Initialize $\texttt{FT2}[256][2][2][256]$ with zeros.
for $\theta = 0$ to 255 **do**
  for $\texttt{carry} = 0, 1$ **do**
    for $(x_0, x_1) = (0, 0)$ to $(255, 255)$ **do**
      $u = (\texttt{carry} \boxplus S_R^{-1}(x_0) \boxplus x_1)\ \&\ \texttt{0xff}$
      $f = (u \oplus x[1] \oplus \theta \cdot x[0])\ \&\ \texttt{0xff}$
      $\texttt{FT2}[f][(u \gg 8)\ \&\ \texttt{0x1}][\texttt{carry}][\theta] + +$

Algorithm 6 Pre-compute $M[256][2][2]$

Processing:

Initialize $M[256][2][2]$ with zeros.
for $\texttt{carry} = 0$ to 1 **do**
  for $(x_0, x_1) = (0, 0)$ to $(255, 255)$ **do**
    $u = \texttt{carry} \boxplus S_R^{-1}(x_0) \boxplus x_1$
    $f = x[0]\ \&\ \texttt{0xff}$
    $M[f][(u \gg 8)\ \&\ \texttt{0x1}][\texttt{carry}] + +$

The Fast Table Technique

Algorithm 7 Compute the distribution of $N_1(t)$ over GF(2^8)

Input: $\texttt{FT2}[256][2][2][256], M[256][2][2]$, $\Lambda' = (\Lambda'_3, \Lambda'_2, \Lambda'_1, \Lambda'_0)$

Processing:

Initialize $M_1[2][256]$ and $M_2[2][256]$ with zeros.
if $\Lambda_0 \neq 0$ **then**
  for $\texttt{carry} = 0, 1$ and $\theta = 0, \cdots, 255$ **do**
    $M_1[\texttt{carry}][\Lambda_0 \cdot \theta] += \frac{\texttt{FT2}[\theta][\texttt{carry}][0][\Lambda_0^{-1} \cdot \Lambda'_0]}{2^{16}}$
else
  for $\texttt{carry} = 0, 1$ and $\theta = 0, \cdots, 255$ **do**
    $M_1[\texttt{carry}][\Lambda'_0 \cdot \theta] += \frac{M[\theta][\texttt{carry}][0]}{2^{16}}$
for $i = 1$ to 3 **do**
  Initialize M_2 with zeros
  for $\texttt{carry} = 0, 1, 2$ and $\theta = 0, \cdots, 255$ **do**
    for $\texttt{carry}_1 = 0, 1, 2$ and $\theta_1 = 0, \cdots, 255$ **do**
      if $\Lambda_i \neq 0$ **then**
        $M_2[\texttt{carry}_1][\Lambda_i \cdot \theta_1 \oplus \theta] += \frac{\texttt{FT2}[\theta_1][\texttt{carry}_1][\texttt{carry}][\Lambda_0^{-1} \cdot \Lambda'_0] \cdot M_1[\texttt{carry}][\theta]}{2^{16}}$
      else
        $M_2[\texttt{carry}_1][\Lambda'_i \cdot \theta_1 \oplus \theta] += \frac{M[\theta_1][\texttt{carry}_1][\texttt{carry}] \cdot M_1[\texttt{carry}][\theta]}{2^{16}}$
  $M_1 \leftarrow M_2$
Output: The distribution $p_i = \sum_{j=0}^{1} M_2[i][j]$ for $0 \leq i \leq 255$.

The Fast Table Technique

Table: All the non-negligible approximations over GF(2^8) and their SEIs

SEI	Number	SEI	Number	SEI	Number	SEI	Number
$2^{-28.9886}$	255	$2^{-34.812}$	255	$2^{-39.263}$	255	$2^{-43.2765}$	$255 \cdot 51$
$2^{-29.2507}$	255	$2^{-35.1646}$	255	$2^{-39.5279}$	$255 \cdot 15$	$2^{-42.1809}$	255
$2^{-30.2065}$	255	$2^{-36.7998}$	255	$2^{-40.6996}$	$255 \cdot 29$	$2^{-44.3852}$	$255 \cdot 34$
$2^{-34.7025}$	255	$2^{-37.7404}$	$255 \cdot 11$	$2^{-41.2091}$	$255 \cdot 45$	$2^{-45.173}$	$255 \cdot 7$
$2^{-34.9728}$	255	$2^{-38.396}$	$255 \cdot 9$	$2^{-42.3586}$	$255 \cdot 45$	$2^{-46.0798}$	$255 \cdot 2$
$2^{-34.8501}$	255	$2^{-39.078}$	255	$2^{-42.1809}$	255	$2^{-47.0925}$	255

- In practical experiments, we have made an exhaustive search of all the possible values of the linear mask Γ within several hours and have identified all the linear masks that results in a non-negligible SEI for the same kind of linear approximations as those considered at Crypto 2015 for the first time. This provides a good answer to the first half of *Problem*, as shown in the above Table 1.
- From Table 1, we can see that there are 255 large-unit linear approximations having a SEI of $2^{-28.9886}$, which is slightly higher than the previous best SEI of $2^{-29.2507}$. There are also 255 byte-wise linear approximations with a SEI of $2^{-30.2065}$.

Vectorial Fast Correlation Attacks on SNOW 2.0 over GF(2^8)

- Let $\Gamma_0, \Gamma_1, \Gamma_2$ be the three linear masks listed in Table 1 over GF(2^8) having the three largest SEIs and $z^{(t)} = z_t \oplus z_{t+1}$, then the adversary could establish a 3-dimensional probabilistic system as

$$(\langle \Gamma_0, z^{(t)} \rangle, \langle \Gamma_1, z^{(t)} \rangle, \langle \Gamma_2, z^{(t)} \rangle) = (\langle \psi_t^0, s^{(0)} \rangle, \langle \psi_t^1, s^{(0)} \rangle, \langle \psi_t^2, s^{(0)} \rangle) \oplus \widetilde{\mathbb{E}},$$

- To have the optimal time/memory/data complexities, we have made a broad search of the involved parameters in the vectorial FCAs over GF(2^8), i.e., the remaining information dimension l' after collision reduction, the optimal vectorial code-reduction configuration under the constraints of the concrete codeword length and the information dimension, and the SEI of the final noise vector.

Vectorial Fast Correlation Attacks on SNOW 2.0 over GF(2^8)

- Given $\Gamma_0 = \texttt{0x00010201}$, $\Gamma_1 = \texttt{0x00010003}$ and $\Gamma_2 = \texttt{0x01000001}$, it is found that with the parameters $l = 64, l' = 25, k = 4$, we have a time complexity of $2^{148.69}$ for restoring the secret initial state and the data complexity of $N = 2^{148.60}$ keystream bits. The companion configuration of the vectorial code-reduction over GF(2^8) is $\mathcal{C} = 1 \cdot \mathcal{H}_3 \ \dot{+} \ 1 \cdot \mathcal{H}_6 \dot{+} \ 5 \cdot \mathcal{G} \ \dot{+} \ 15 \cdot \{0,1\}^i$, where $\mathcal{H}_i$ is the Hamming code $[2^i - 1, 2^i - 1 - i, 1]$, $\mathcal{G}$ is the Golay code $[23, 12, 3]$ and $\{0,1\}^i$ is the trivial perfect code. In this configuration, the introduced bias at each bit position is $2^{-22.07}$ and the SEI of the final noise vector is $\Delta(p_{final}) = 2^{-136.26}$.
- We have verified the theoretical analysis of the new vectorial FCA framework on a reduced version of SNOW 2.0 in experiments.

Vectorial Fast Correlation Attacks on SNOW 2.0 over GF(2^8)

Table: Complexity comparison of the new attack with the previous best attacks on SNOW 2.0†

Target	Attack Type	L	Dimen.	Data	Time	Ref.
	distinguishing	1	1	2^{174}	2^{174}	FSE 2006
	state/key recovery	1	1	$2^{212.38}$	$2^{198.77}$	Asiacrypt 2008
	state/key recovery	255	1	$2^{163.59}$	$2^{164.15}$	Crypto 2015
SNOW 2.0		765	3	$2^{148.77}$	$2^{148.80}$	this work
	state/key recovery	765	3	$2^{148.6}$	$2^{148.69}$	this work
		765	3	$2^{147.67}$	$2^{149.49}$	this work
	Information leakage	765	3	$2^{140.86}$	$2^{140.78}$	this work
		765	3	$2^{144.37}$	$2^{144.86}$	this work

† L is the number of large-unit linear approximations having the close largest SEIs

Conclusions

- We have presented a framework for vectorial fast correlation attacks over extension fields with the complete complexity analysis.
- It unifies the one-dimensional fast correlation attack over extension fields from Crypto 2015 with the vectorial approach, effectively exploiting vector-wise correlations derived from large-unit linear approximations as component-wise coordinates.
- From a purely algebraic viewpoint, we provide a new solution to the well-known NP-hard problem of decoding a random linear code over extension fields, thereby enriching the cryptanalysis toolkit and offering an alternative decoding method within the attack framework.

Conclusions

- We present both improved state/key recovery and information leakage attacks against SNOW 2.0, the ISO/IEC 18033-4 standard and a benchmark stream cipher in the European eSTREAM project.
- These results outperform the previous best attacks from Crypto 2015 by factors of $2^{15.46}$ and $2^{23.29}$, respectively. The theoretical findings have been verified through practical experiments on a small-scale version of SNOW 2.0.
- Future work will examine the security of other members of the SNOW family and explore the applicability of the new framework to more word-oriented symmetric primitives.

Thank you!

Q & A